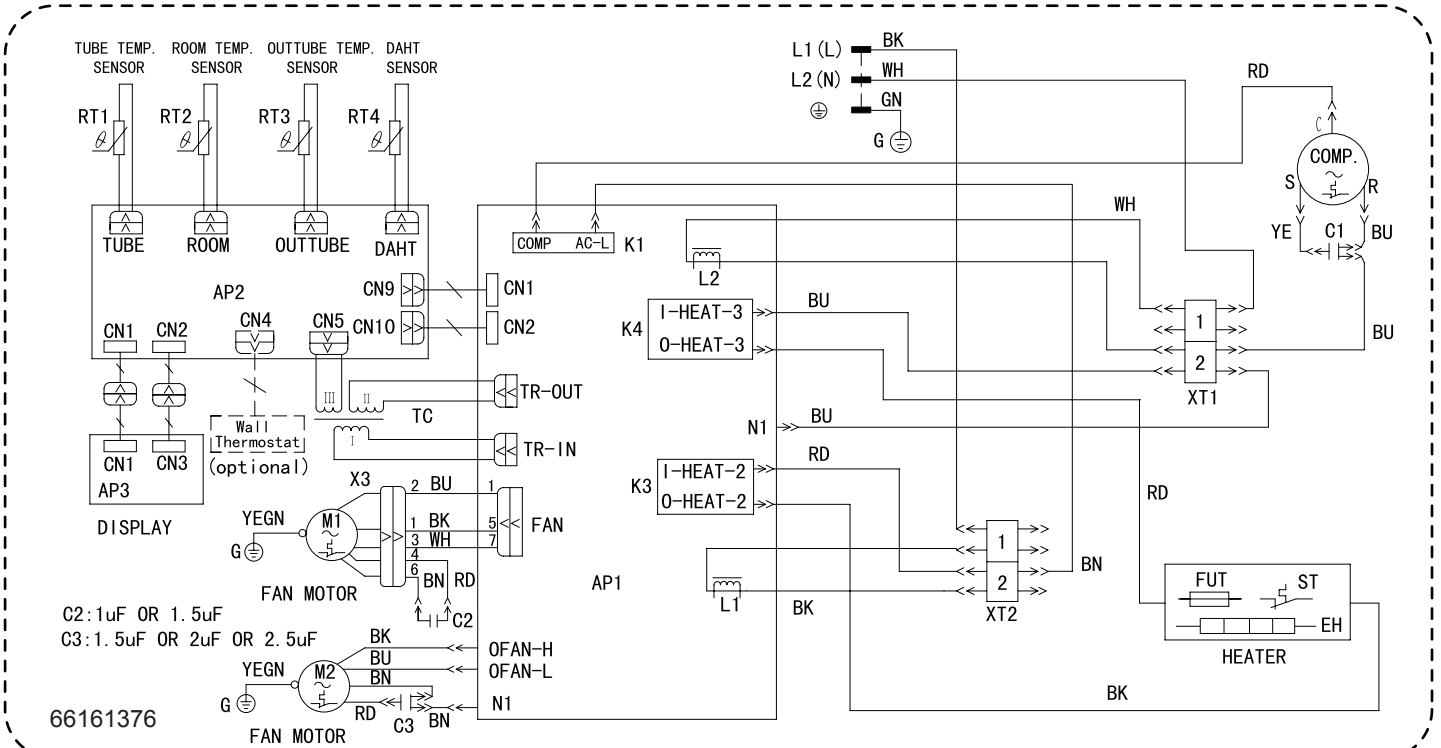
TUBE TEMP. SENSOR
ROOM TEMP. SENSOR
OUTTUBE TEMP. SENSOR
DAHT SENSOR
RT1
RT2
RT3
RT4
TUBE
ROOM
OUTTUBE
DAHT
AP2
CN9
CN10
CN1
CN2
CN4
CN5
CN1
CN3
AP3
DISPLAY
Wall Thermostat
(optional)
TC
TR-OUT
TR-IN
X3
YEGN
M1
G
FAN MOTOR
BU
BK
WH
BN
RD
FAN
C2
C2:1uF OR 1.5uF
C3:1.5uF OR 2uF OR 2.5uF
BK
BU
BN
YEGN
M2
G
RD
C3
BN
FAN MOTOR
OFAN-H
OFAN-L
N1
66161376
L1 (L)
L2 (N)
G
BK
WH
GN
COMP
AC-L
K1
L2
K4
I-HEAT-3
O-HEAT-3
BU
N1
BU
K3
I-HEAT-2
O-HEAT-2
RD
AP1
L1
BK
RD
COMP.
S
R
YE
C1
BU
WH
BU
XT1
RD
BN
XT2
FUT
ST
EH
HEATER
BK