Grow Optimized Dehumidifier

Model A710V3 | Specification Sheet

SPECIFICATIONS	
Capacity[1] PPD AT 80°/60%RH	710
Energy factor[1]	3.0 L/kWh 6.35 pints/kWh
Voltage, Phase, Frequency	277 VAC, 1Phase, 60Hz
Current draw (amps)[1]	17.4
Power (watts)[1]	4,820
Btu/h[2]	16,168
Power cord type and length	SJT, L7-30P, 10ft
Hardwire	Field-configurable
Breaker size	30 amp
Wire size	10 Gauge Copper
CFM	0.0" w.c 1760 0.2" w.c 1677 0.4" w.c 1593 0.6" w.c 1510
Dimensions:	W: 44 7/8" H: 34 13/32" L: 31 23/32"
Weight	360 lbs.
Operating range Temp/RH	60/40 to 85/80

[1]Rated capacity and energy factor test done and current draw measured at 80°F/60% RH inlet air at 0.0 ESP, 277 VAC.
[2]Total cooling load @ 80°F/60% RH and 277 VAC.

FEATURES	
Control	Onboard digital with diagnostics
Air supply orientation	Horizontal
Filter	29.5"x31.5"x1.75" MERV 11 (Part #5852)
Refrigerant	R410A
Coil type	Copper tube, Aluminum fin with I-coat
Drain connection*	¾" FNPT
P-Trap required	Yes (Included)
Leveling feet	Sold separately (Model #5789)
Hanging brackets	Built-in
Duct Kit	Part #5859
Warranty	5 Years on all parts including refrigeration system

*Requires drain trap

INCLUDED ITEMS	
Control	Model A77
Drain fittings	¾" MNPT x ¾" BARB, ¾" MNPT x ¾" Female pipe, ¾" x ¾" x ¾" T-Fittting, ¾" P-Trap
Thermostat wire	30' 20 gauge 4-wire

277 VAC

ANDEN A710V3

VLGR TECHNOLOGY PATENT PENDING

The A710V3 features VLGR technology, which modulates the refrigeration system based on the load, allowing you to maximize VPD and provide greater control during late flower conditions.

APPLICATION

The Anden Model A710V3 Dehumidifier is the perfect solution for the precise management of humidity required in an indoor growing environment.

INCLUDED CONTROL

MODEL A77

Dedicated monitoring and control of each dehumidifier at canopy height

MODEL A77 SPECIFICATIONS	
Electrical	
Input voltage and current	Voltage: 35VDC (supplied by dehumidifier control board)
Output	Communication (RS485)
Control	
Control range	35%–80% RH
Accuracy	+/-5% RH
Differential	3% RH
Low limit	40°F dew point
High limit	99°F dry bulb

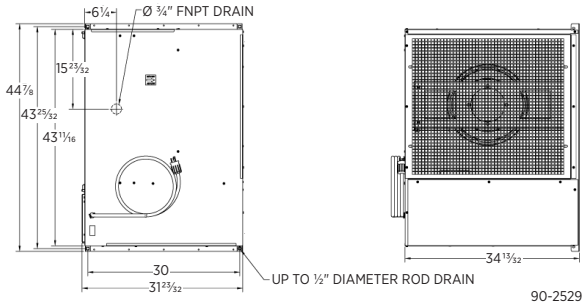

90-2529

Drain Requirements

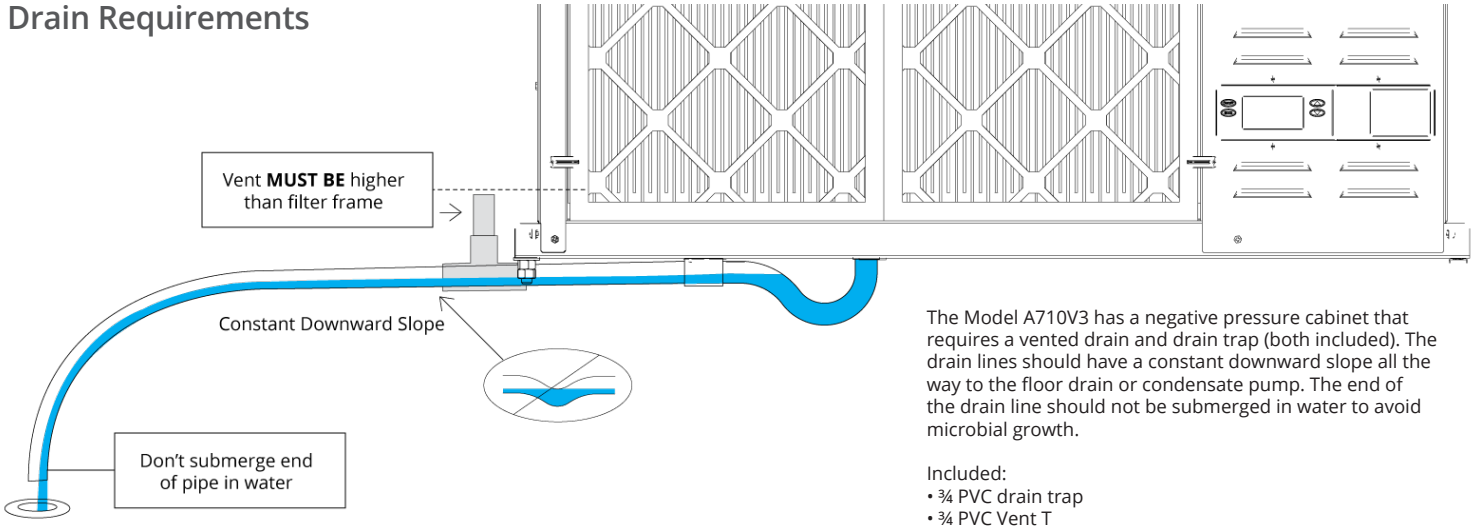

The Model A710V3 has a negative pressure cabinet that requires a vented drain and drain trap (both included). The drain lines should have a constant downward slope all the way to the floor drain or condensate pump. The end of the drain line should not be submerged in water to avoid microbial growth.

Included:
- ¾ PVC drain trap
- ¾ PVC Vent T
- PVC Connectors

Placement

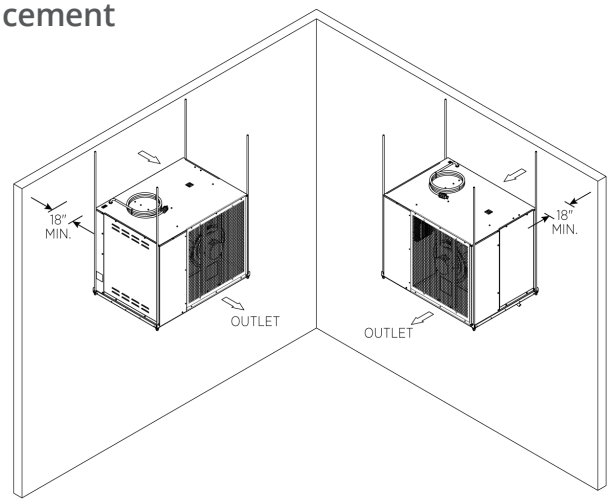

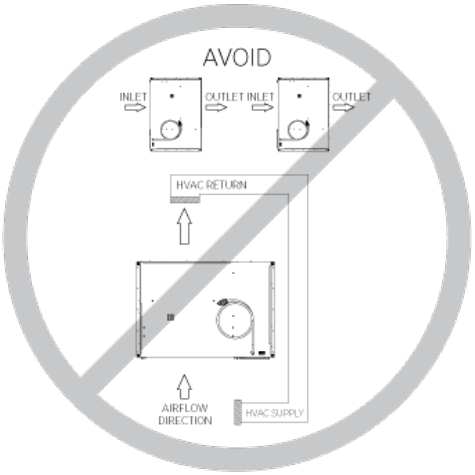

Model A77 Control (Included)

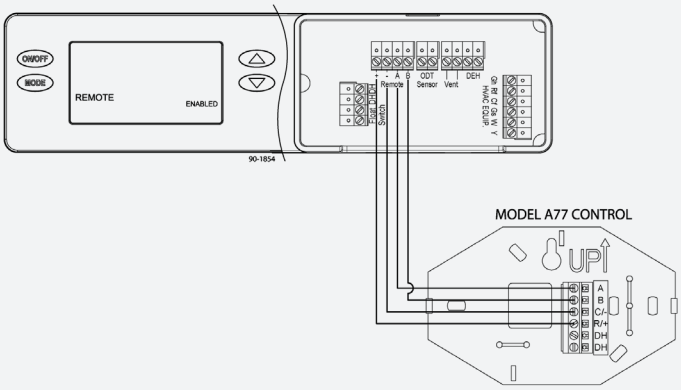

External Control w/ Dry Contacts

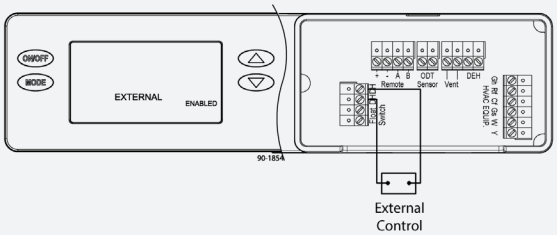

The Model A710V3 can be controlled with the Model A77 Control (included) or any external control that can provide a dry contact closure. When the Model A77 is used, the User Interface on the dehumidifier **MUST BE** set to "Remote". For all other external controls, the User Interface **MUST BE** set to "External". Refer to the quick start guide or installation manual for instructions on accessing the installer set-up menu.

Form. No. 6568 • 316178 03.23
© 2023 Anden | anden.com | 800.972.3710

Anden reserves the right to change specifications without notice.