Model A710V1 and A710V3 Dehumidifier

Installation and Operating Instructions

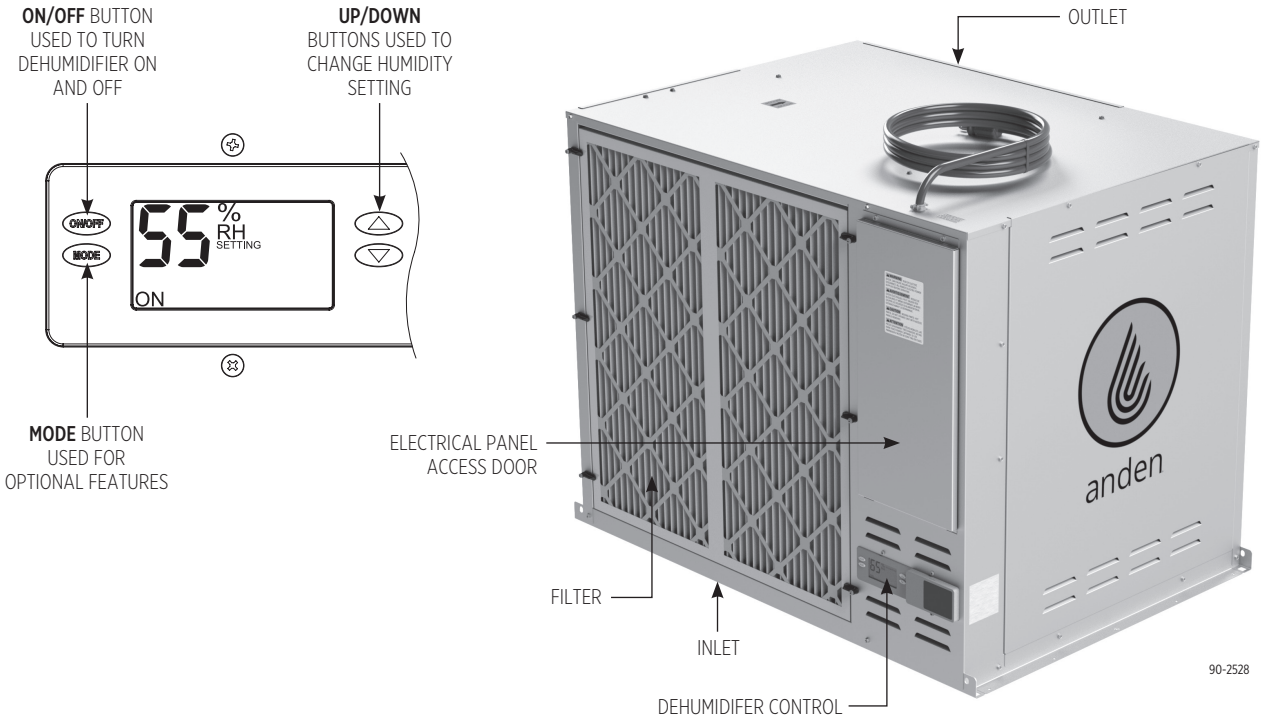

TABLE OF CONTENTS

SAFETY INSTRUCTIONS 2

SYMBOLS 2

SPECIFICATIONS 3

DIMENSIONS 4

UNPACKING THE DEHUMIDIFIER 4

LOCATION CONSIDERATIONS 4

SUSPENDING THE DEHUMIDIFIER 5
- Hanging the Dehumidifier 5
- Ducting 5

DRAIN INSTALLATION 6
- Condensate Pan, Condensate Pump and Float Switch 6

HARD WIRING – LINE VOLTAGE 7

SYSTEM SET UP & CHECKOUT 8
- Installer Test Mode 8

WIRING AND SET-UP 9
- Model A77 Control 9
- Alternative External Control 10

DAISY CHAIN WIRING 11
- Model A77 as Driving Control 11
- Alternate External Dry Contact Control as Driving Control 12

CODES 12

MAINTENANCE, SERVICE, AND TROUBLESHOOTING 13
- Troubleshooting and Repair 13
- Leak Detection 13
- Decommissioning 13
- Diagnostic Codes 14
- TABLE 1 – Diagnostic Codes 14
- TABLE 2 – Troubleshooting Guide 15

LIMITED WARRANTY 15

SERVICE PARTS 16

READ AND SAVE THESE INSTRUCTIONS

SAFETY INSTRUCTIONS

⚠ WARNING

1. All safety precautions must be followed.
2. To be repaired only by trained service personnel and/or qualified HVAC technicians. Servicing the electrical system on the unit should be carried out by a qualified and licensed electrician.
3. Lockout tagout procedures should be followed at all times during repairs.
4. **RISK OF ELECTRIC SHOCK. CAN CAUSE INJURY OR DEATH:** System contains two independent protective earthing (grounding) terminals which both shall be properly connected and secured. Disconnect electrical power before starting installation. Leave power disconnected until installation/ service is completed.
5. Sealed electrical components shall be replaced, not repaired
6. Risk of fire or explosion; flammable refrigerant used.
7. Do not puncture refrigerant tubing or tap into the sealed refrigeration system.
8. Store in a well ventilated room without continuously operating flames or other potential ignition sources.
9. Be aware that refrigerants may not contain odor.
10. The use of silicon sealant can inhibit the effectiveness of some types of leak detection equipment.
11. Under no circumstances shall potential sources of ignition be used in the searching or for detection of refrigerant leaks. A halide torch (or any other detector using a naked flame) shall not be used.
12. Sharp edges may cause serious injury from cuts. Use care when cutting plenum openings and handling duct work.
13. Only approved auxiliary devices approved by the appliance manufacturer shall be installed in the duct work.
14. Auxiliary devices which may be ignition sources shall not be installed in ductwork.
15. When connected via air ducts to one or more rooms the appliance shall be directly ducted to the space. Open areas such as false ceilings shall not be used as a return air duct.
16. Do not use means to accelerate the defrosting process or to clean.
17. Dropping may cause personal injury or equipment damage. Handle with care and follow installation instructions.
18. Dispose of properly in accordance with federal or local regulations

⚠ CAUTION

1. Read all instructions before beginning installation.
2. This appliance is not intended for use by persons (including children) with reduced physical, sensory or mental capabilities, or lack of experience and knowledge, unless they have been given supervision or instruction concerning use of the appliance by a person responsible for their safety. Children should be supervised to ensure that they do not play with the appliance.
3. Never operate electrical equipment near or in standing water. Do not use in pool applications. Pool chemicals can damage the dehumidifier.
4. Do not use solvents or cleaners on or near the circuit board. Chemicals can damage circuit board components.
5. Wait 24 hours before running the unit if it was not shipped or stored in the upright position
6. If the supply cord is damaged, it must be replaced by the manufacturer, its service agent or similarly qualified persons in order to avoid a hazard.
7. Do not stick fingers or other objects through the safety grill.
8. Do not sit or stand on the unit, or use as a shelf or table.
9. The unit is designed to be installed indoors only.
10. Place in well ventilated area to prevent accumulation of refrigerant in the event of refrigeration system failure and/or leak
11. The installer should consider adding an easily accessible all-pole disconnect switch within sight of the appliance if the plug receptacle connection point is above reach..

SYMBOLS

[symbol ISO 7010-W021 (2011-05)]	[symbol ISO 7000-0790 (2004-01)]	[symbol ISO 7000-1659 (2004-01)]	[symbol ISO 7000-1659 (2004-01)]
Warning: flammable materials	Read Operator's manual.	Service indicator; read technical manual	Operator's manual; operating instructions

SPECIFICATIONS

INCLUDED ITEMS	Model A710V1	Model A710V3
Control	Model A77	
Drain Fittings	3/4" MNPT x 3/4" BARB, 3/4" MNPT x 3/4" Female pipe, 3/4" x 3/4" x 3/4"" T-Fittting, 3/4" P-Trap	
Thermostat Wire	30 feet, 20 gauge 4-wire	

SPECIFICATIONS	Model A710V1	Model A710V3
Capacity	720 PPD (1)	720 PPD (2)
Energy Factor	3.1 L/kWh 6.5 pints/kWh (1)	3.1 L/kWh 6.5 pints/kWh (2)
Voltage, Phase, Frequency	208–240 VAC, 1 Phase, 60 Hz	277 VAC, 1 Phase, 60 Hz
Current Draw (amps)	22.3 (1)	16.3 (2)
Power (watts)	4,600 (1)	4,600 (2)
Btu/h	15,696 (3)	15,696 (4)
Power Cord Type and Length	SJT, L6-30P, 10 feet	SJT, L7-30P, 10 feet
Hardwire	Field-configurable	
Breaker Size	30 amp	
Wire Size	10 gauge copper	
Airflow	0.0" w.c. 2010 CFM, 0.2" w.c. 1920 CFM, 0.4" w.c. 1830 CFM, 0.6" w.c. 1740 CFM	
Dimensions	44-7/8" W x 34-13/32" H x 31-23/32" L	
Weight	360 lbs (without packaging)	
Operating Range	60°F/40% RH to 85°F/80% RH	

(1) Rated capacity and energy factor test done and current draw measured at 80°F/60% RH inlet air at 0.0 ESP, 208 VAC.

(2) Rated capacity and energy factor test done and current draw measured at 80°F/60% RH inlet air at 0.0 ESP, 277 VAC.

(3) Total cooling load @ 80°F/60% RH and 208 VAC.

(4) Total cooling load @ 80°F/60% RH and 277 VAC.

FEATURES	
Control	Onboard digital with diagnostics
Air Supply Orientation	Horizontal
Filter	MERV 11, 29.5" x 31.5" x 1.75" (Part #5852)
Refrigerant	R-32
Coil Type	Copper tube, aluminum fin with I-coat
Drain Connection*	3/4" FNPT
P-Trap Required	Yes (included)
Leveling Feet	Sold separately (Part #5789)
Hanging Brackets	Built-in
Duct Kit	Sold separately (Part #5859)
Warranty	5 Years on all parts including refrigeration system

**Requires drain trap*

ENVIRONMENTAL		
Inlet Air(5) Condition Limits	Minimum	Maximum
Temperature	60°F	100°F
Dew Point	36°F	78°F
Ambient Air(6) Condition Limits	Minimum	Maximum
Temperature	50°F	100°F

*(5) **Inlet Air** applies to the air drawn into the dehumidifier in either ducted or non-ducted applications.*

*(6) **Ambient Air** applies to the air directly surrounding and/or in contact with the exterior of dehumidifier. This pertains to applications where the dehumidifier is ducted into conditioned space, but located elsewhere.*

LOCATION (INDOOR APPLICATION ONLY)	
Minimum Installation Height	8.2 feet (2.5 meters)
Minimum Installation Room Area	100 square feet (9.3 square meters)

DIMENSIONS

FIGURE 1 – DIMENSIONS (INCHES)

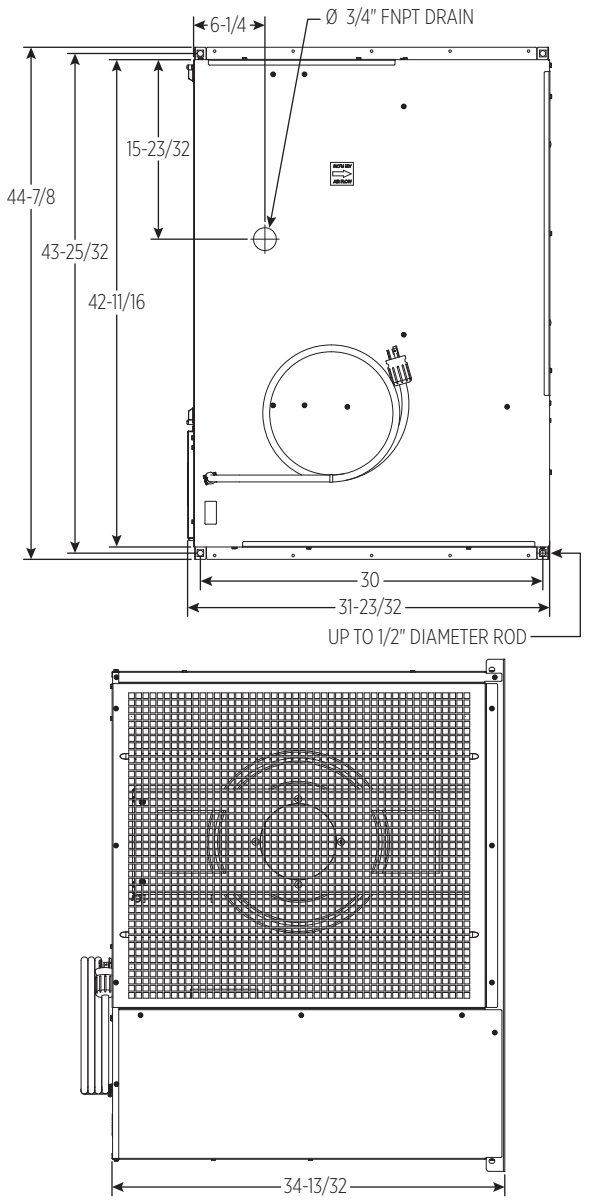

90-2529

UNPACKING THE DEHUMIDIFIER

Disassemble the carton, but leave the unit attached to the pallet for installing the unit with a forklift or scissors lift.

INCLUDED IN THE CARTON

- Dehumidifier
- Installation manual
- Model A77 control
- 3/4" P-Trap
- 3/4" MNPT x 3/4" female pipe
- 3/4" x 3/4" x 3/4" T-fitting
- Terminal screwdriver
- 30 feet of thermostat cable
- MERV 11 filter

LOCATION CONSIDERATIONS

This appliance is classified as to not be accessible to the general public.

1. The minimum installation height is 8.2 feet. The minimum installation room area is 100 square feet.
2. Installation below the required height or room area is not permitted. Additional considerations must be taken into account if installation outside specification is desired. Please reach out to your application support representative for more information.

The dehumidifiers should be spaced evenly throughout the area to be dehumidified with the following recommendations:

1. Avoid placement where the discharge of one dehumidifier is pointing toward the inlet of another.
2. Avoid locating the dehumidifier inlet too near a supply register. Space is not usually available to totally avoid this, but minimizing the amount of cold air that is discharged to the dehumidifier inlet will improve moisture removal performance of the dehumidifier.
3. Account for handling dehumidifier condensate by considering drain or sump pump locations.
4. Allow a minimum of 18" of clearance on all sides of the unit for installation, service, and maintenance.
5. Place in well ventilated area to prevent accumulation of refrigerant in the event of refrigeration system failure and/or leak.
6. The installer should consider adding an easily accessible all-pole disconnect switch within sight of the appliance if the plug receptacle connection point is above reach.

FIGURE 2 – SPACE CLEARANCES

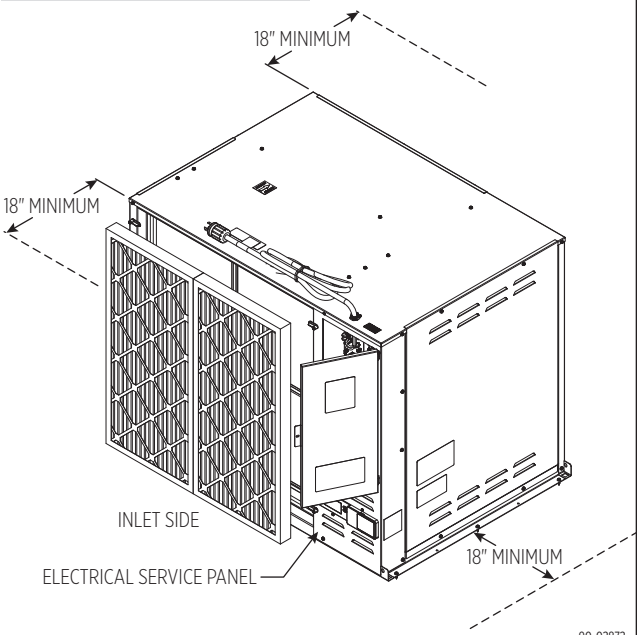

90-02872

SUSPENDING THE DEHUMIDIFIER

HANGING THE DEHUMIDIFIER

Use 3/8″ or 1/2″ threaded rod to suspend the unit from appropriate ceiling structure (see **FIGURE 4**). The unit weight is 360 lbs. Install vibration isolators if located in an area where noise could be a concern. Level unit right to left and front to back so that unit drains properly. **IMPORTANT: Install lock nuts to secure the dehumidifier to the threaded rod as shown in FIGURE 5.**

DUCTING

Use duct kit Part #5859 for installing ductwork to the dehumidifier. Reference the instructions provided with duct kit 5859 for installation details.

⚠ WARNING

1. Only approved auxiliary devices approved by the appliance manufacturer shall be installed in the duct work.
2. Auxiliary devices which may be ignition sources shall not be installed in ductwork.

FIGURE 4 – SUSPENSION

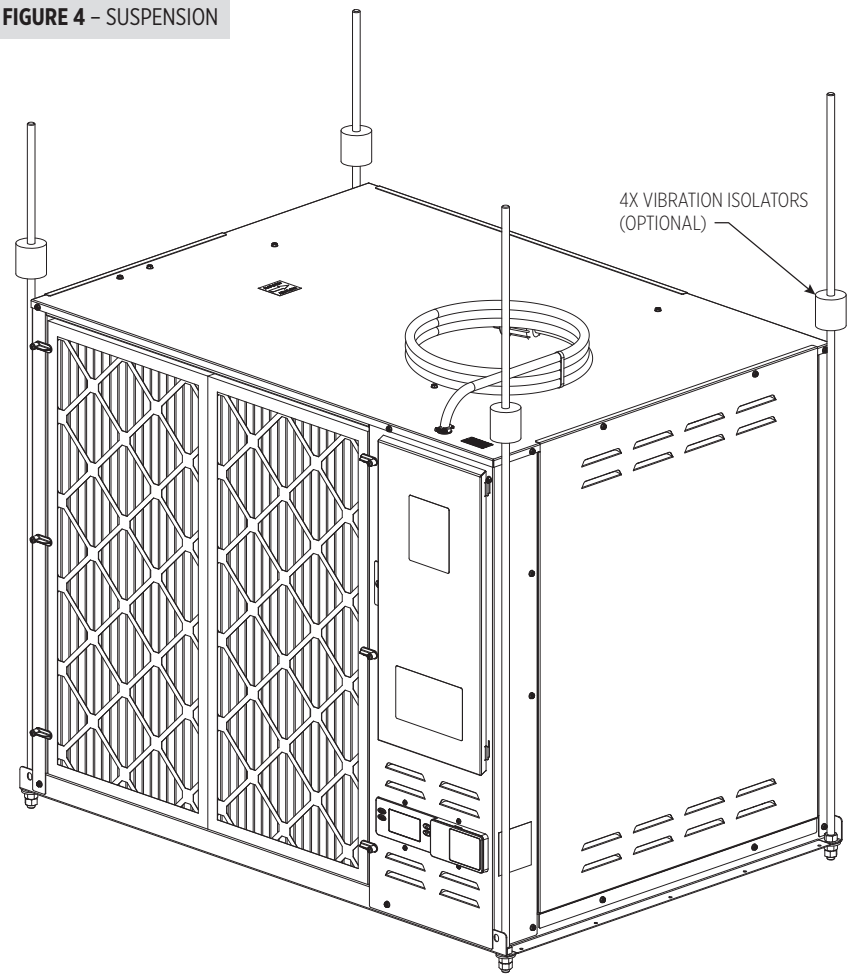

FIGURE 5 – SECURE BRACKET TO DEHUMIDIFIER

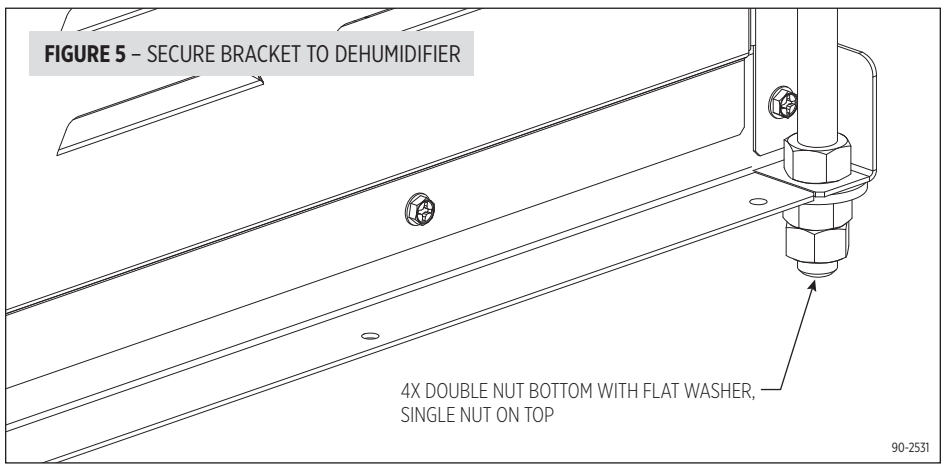

DRAIN INSTALLATION

The blower draws air through the dehumidifier, putting the cabinet under negative pressure. As a result, the included P-trap is required for proper draining. The installed drain fitting on the dehumidifier is 3/4" FNPT. Use the included fittings to trap and install the drain. See **FIGURE 6**. The drain tubing can be hard pipe or flexible tubing. **NOTE:** PTFE thread seal tape is recommended for the threaded connections and **hand tighten only**. Use PVC primer and cement for all slip fit connections to prevent leaks. After installing the drain connections, trap, and tubing, pour enough water (about 2 pints) into the dehumidifier drain pan to prime the trap.

If the drain tubing will be installed to a condensate pump, or if a common drain tube will serve multiple dehumidifiers or air conditioners, a vacuum break is recommended to prevent the p-trap from being unintentionally siphoned. Install a T-fitting with a short section of drain tubing pointed vertically and extending above the start of the filter (see **FIGURE 6**). Install the vacuum break after the P-trap.

FIGURE 6 – DRAIN ASSEMBLY

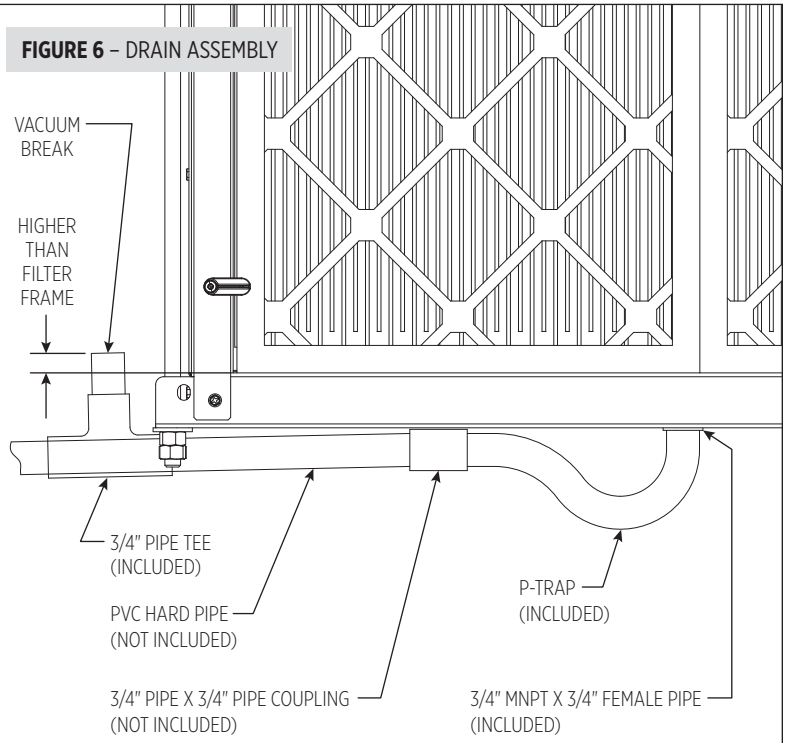

CONDENSATE PAN, CONDENSATE PUMP AND FLOAT SWITCH

A condensate pan is recommended when suspending the dehumidifier over finished areas or product. Adhere to local codes regarding draining of the condensate pan. If a condensate pump is needed, install it in the condensate pan as well.

Install a condensate overflow safety switch (i.e. float switch) in the condensate pan, remove the factory installed jumper wire between the Float Switch terminals on the control and wire the float switch to the dehumidifier as shown in **FIGURE 7**. Overflow safety switches on condensate pumps can be wired to the Float Switch terminals in a similar fashion.

FIGURE 7 – FLOAT SWITCH WIRING

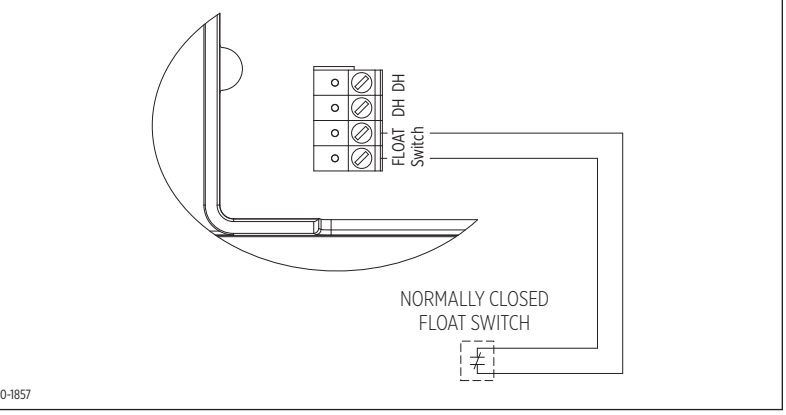

HARD WIRING – LINE VOLTAGE

⚠ CAUTION

If the supply cord is damaged, it must be replaced by the manufacturer, its service agent or similarly qualified persons in order to avoid a hazard.

The A710V1 dehumidifier comes with a power cord that has a NEMA L6-30 plug that can simply be plugged into a corresponding NEMA L6-30 receptacle. The A710V3 dehumidifier comes with a power cord that has a NEMA L7-30 plug that can simply be plugged into a corresponding NEMA L7-30 receptacle. See **FIGURE 8** for power cord wiring connections. The plug can be removed and replaced by hard-wired electrical service if desired.

United States Installation: Make all electrical connections in accordance with the current edition of the NEC ANSI/NFPA 70 and any local codes or ordinances that may apply.

Canada Installation: Make all electrical connections in accordance with the current edition of the Canadian Electrical Code CSA C22.1 and any local codes or ordinances that may apply.

	Model A710V1	Model A710V3
Voltage	208-240 VAC, single phase, 60Hz	277 VAC, single phase, 60Hz
Maximum Overload Protection (MOP)	40A	
Recommended Breaker Size	30A	
Recommended Wire Gauge	10g	
Minimum Circuit Ampacity (MCA)	30A	

1. Disconnect electrical service at the main fuse or circuit breaker.
2. Run electrical service to where the dehumidifier is to be installed following all required local and national codes and standards.
3. Remove the electrical service panel (see **FIGURE 9**).
4. Depress the levers of the terminal blocks mounted on the MOV board to disconnect the black and white power cord wires.
5. Remove the screw securing the power cord ground wire to the cabinet.
6. Route the service wires through the opening in the dehumidifier and secure the cable or conduit to the opening in the dehumidifier using fittings/clamps intended for the conduit/cable used.
7. Insert the black service wire into the L1 terminal and the white service wire into the L2 terminal. Release levers to lock into place.
8. Insert the ground wire (bare or green) of the electrical service into the ground lug and secure it in place by tightening the ground lug screw.
9. Reattach the electrical service panel to the dehumidifier.
10. Restore electrical service at the fuse or circuit breaker.

FIGURE 8 – POWER CORD WIRING

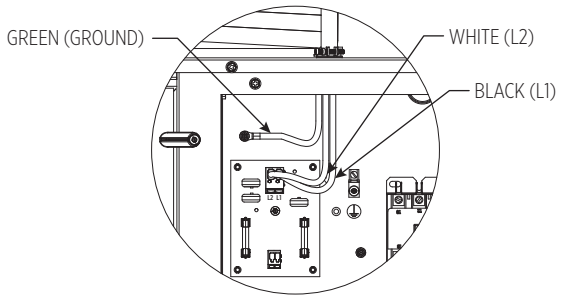

FIGURE 9 – HARD WIRING TO REPLACE THE POWER CORD

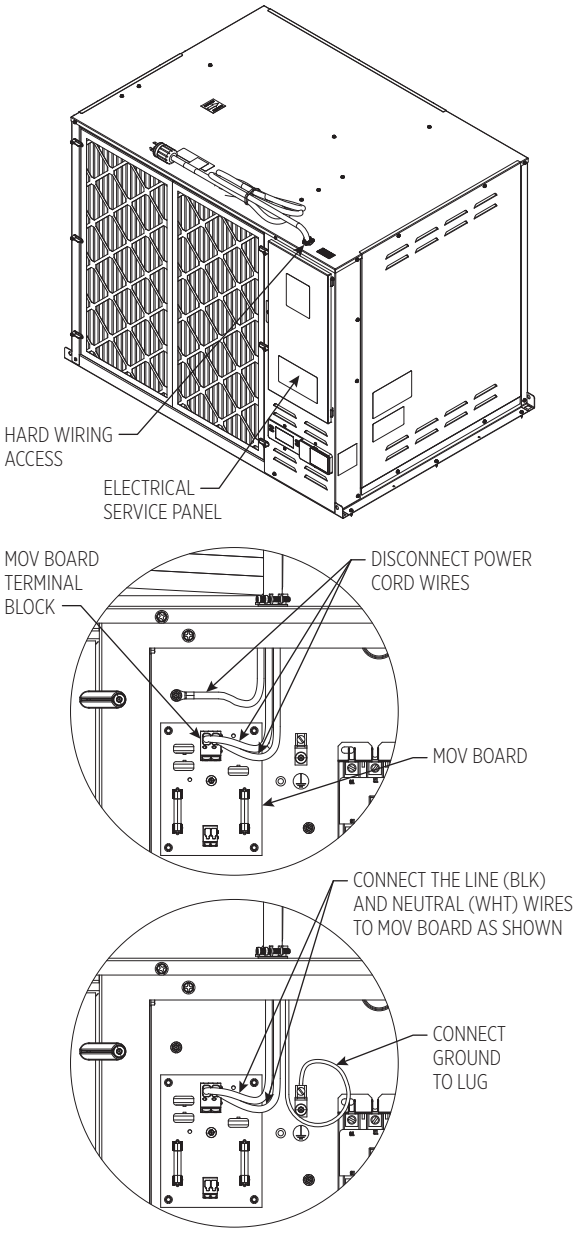

SYSTEM SET-UP & CHECKOUT

Skip set up and proceed to **INSTALLER TEST MODE** on page 8 unless:

- A Model A77 or other external control is to be installed
- changing the air sampling rate

1. Check all wiring.
2. Make sure the wire access cover has been snapped back onto the on-board control.
3. Plug unit in and turn power switch to ON.
4. The on-board control screen should display OFF.

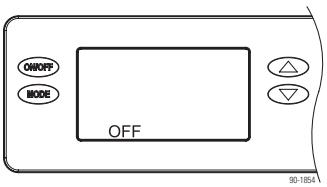

NOTE: If the display backlight is not on, the first button press (any button) will only turn on the backlight. Press the button a second time to achieve function.

5. Hold the MODE button on the on-board control for 3 seconds to enter the Installer Set-up Menu.
6. Navigate through the following screens to set up the dehumidifier for the installed application.

   Use the UP or DOWN arrows to select items and use MODE to switch to the next set-up option. To exit installer set-up, all options must be scrolled through using the MODE button.
7. After the installer set up options have been completed, DONE will blink for 3 seconds and the control will return to the OFF screen.

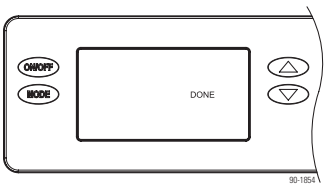

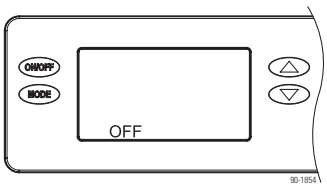

AIR SAMPLING

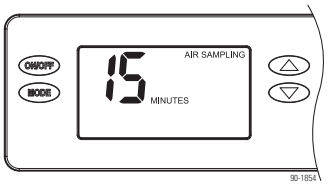

Use the UP or DOWN button to adjust how frequently the dehumidifier samples the air to determine whether or not to dehumidify. Fewer minutes means the dehumidifier will sample more frequently to minimize humidity swings, but increases cost to operate due to more frequent fan operation. Press MODE when done to move to the next screen.

RH OFFSET

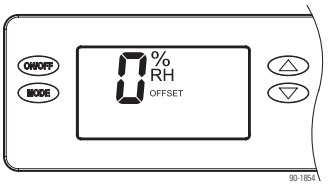

An offset can be applied to the on-board humidity reading to avoid discrepancies with other humidity measuring devices in the home. Use the UP/DOWN arrows to select an offset from -5% to 5%. Press MODE to exit the installer set-up screens.

INSTALLER TEST MODE

If everything is properly wired, the dehumidifier and all of the wired components will turn on and off during Installer Test Mode to demonstrate that all are properly operating. Installer Test Mode lasts for four (4) minutes. If the ON/OFF button is pressed during test mode, the dehumidifier will exit Installer Test Mode and return to the OFF screen.

DEHUMIDIFICATION ONLY

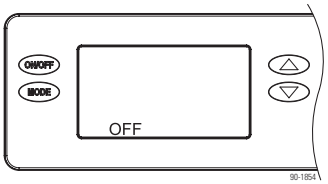

If the dehumidifier is not already OFF, press the ON/OFF button to turn it off.

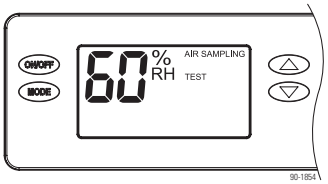

Press and hold the ON/OFF button and MODE buttons for 3 seconds. The measured humidity, AIR SAMPLING and TEST will show on the display.

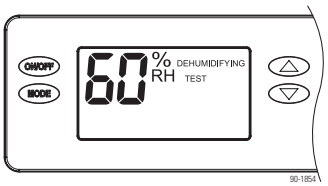

After three (3) minutes the dehumidifier compressor will turn on and DEHUMIDIFYING will replace AIR SAMPLING on the control screen.

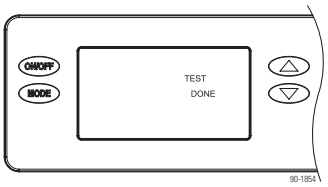

After one minute of compressor operation, all outputs will turn off and DONE will blink for 3 seconds and then return to the OFF screen.

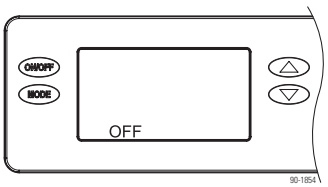

WIRING AND SET-UP

MODEL A77 CONTROL

The Model A77 will measure the relative humidity and turn the dehumidifier on and off to control the humidity level to the desired setting. The humidity setting can be adjusted from the control, while the display allows easy access and monitoring of the humidity level in the space. It is recommended that the Model A77 be mounted at/near canopy height. Shield the Model A77 from direct exposure to HPS or LPS lighting.

NOTE: Use 18-22 AWG wire for control wiring.

Humidity can be controlled using the internal dehumidifier control, a Model A77 control, or a different external control like a thermostat.

Installing an external control eliminates the need to run the dehumidifier blower for sampling, as the control is constantly measuring the humidity close to the canopy. When the humidity level rises above the setting, the dehumidifier is turned on.

TO INSTALL AND USE THE MODEL A77 CONTROL, COMPLETE ALL STEPS:

1. Unplug the dehumidifier or turn off power to the circuit at the breaker or fuse.
2. Run thermostat cable (use 18-22 AWG wire) from the Model A77 to the control of the dehumidifier.
3. Trim about 1/4" of insulation from the end of the wires on each end. Insert the wire into the terminals as shown in **FIGURE 10**.
4. Restore dehumidifier power.

FIGURE 10 – MODEL A77 REMOTE CONTROL WIRING

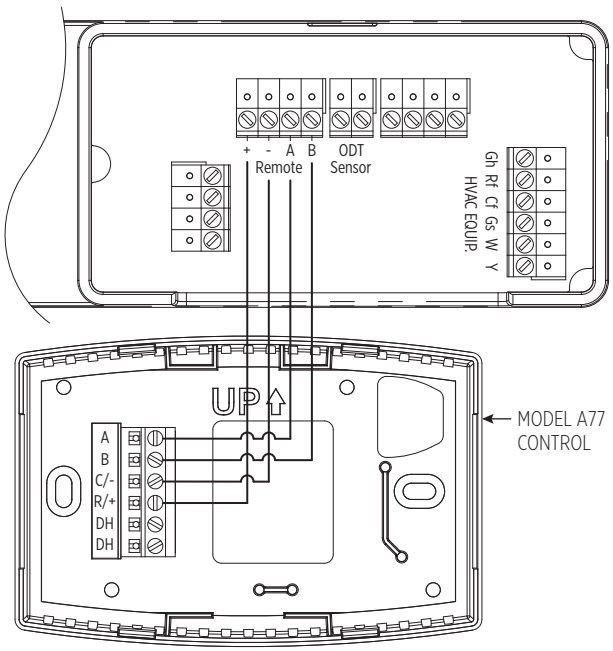

90-2490

TO SET THE DEHUMIDIFIER TO USE THE MODEL A77 CONTROL, COMPLETE ALL STEPS:

1. With power to the dehumidifier, use the ON/OFF button to set the dehumidifier to the OFF position.

   NOTE: If the display backlight is not on, the first button press (any button) will only turn the backlight on. Press the button a second time to achieve the desired function.
2. Hold the MODE button on the on-board control for 3 seconds to enter the **Installer Set-up Menu**.
3. The display should now read **REMOTE** on the left and **DISABLED** on the right. Use the UP or DOWN arrow buttons to set this to **ENABLED**.

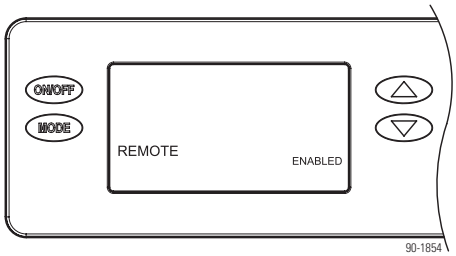

90-1854

4. Once the display reads **REMOTE ENABLED**, press the MODE button to cycle through the other settings until the display blinks **DONE** for 3 seconds.
5. Use the ON/OFF button to turn the dehumidifier ON. The display on your unit should read **REMOTE**.
6. Locate the Model A77 that you just set up. On the Model A77, press the ON button and use the arrow buttons to set your preferred %RH setpoint. When setting up in **REMOTE** mode for the first time, your dehumidifier will wait 3 minutes before starting to dehumidify, regardless of ambient conditions.

ALTERNATIVE EXTERNAL CONTROL

Alternatively, use any other humidity control system as long as it has a dry contact, normally open output dedicated to controlling the dehumidifier. Reference the installation literature provided with the alternative control for wiring, set-up, and operating details.

TO INSTALL AND USE AN ALTERNATIVE EXTERNAL CONTROL, COMPLETE ALL STEPS:

1. Unplug the dehumidifier or turn off power to the circuit at the breaker or fuse.
2. Run thermostat cable (use 18-22 AWG wire) from the alternative external control to the control of the dehumidifier.
3. Trim about 1/4" of insulation from the end of the wires on each end. Insert the wire into the terminals as shown in **FIGURE 11**.
4. Restore dehumidifier power.

FIGURE 11 – ALTERNATIVE EXTERNAL CONTROL WIRING

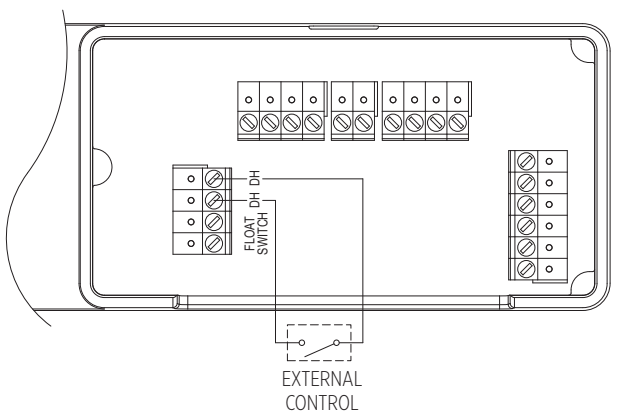

TO SET THE DEHUMIDIFIER TO USE THE ALTERNATIVE CONTROL, COMPLETE ALL STEPS:

1. With power to the dehumidifier, use the ON/OFF button to set the dehumidifier to the OFF position.

   NOTE: If the display backlight is not on, the first button press (any button) will only turn the backlight on. Press the button a second time to achieve the desired function.
2. Hold the MODE button on the on-board control for 3 seconds to enter the **Installer Set-up Menu**.
3. Press MODE again and the display should change to **EXTERNAL** in the center, and **DISABLED** on the right. Use the UP or DOWN arrow buttons to set this to **ENABLED**.

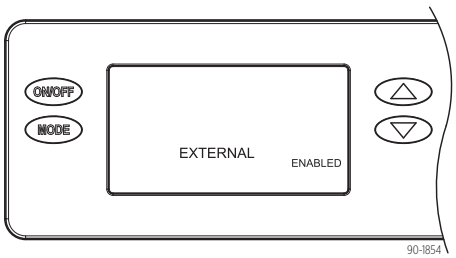

4. Once the display reads **EXTERNAL ENABLED**, press the MODE button to cycle through the other settings until the display blinks **DONE** for 3 seconds.
5. Use the ON/OFF button to turn the dehumidifier ON. The display on your unit should read **EXTERNAL**. Even if there is a demand for dehumidification according to your external control, the dehumidifier will wait 3 minutes before turning on for the **first time only**.

DAISY CHAIN WIRING

Anden dehumidifiers can be wired in a daisy chain application, allowing one Model A77 or alternate dry contact controller to control any number of dehumidifiers wired together. For the best control of humidity keep the daisy chain groups small or control each unit individually.

To connect the Anden dehumidifiers with other manufacturers units, they must be last in the daisy chain line. The Anden units must be first in line.

MODEL A77 AS DRIVING CONTROL

When a Model A77 is used to control the first dehumidifier, Unit #1 must be set to **REMOTE ENABLED** in the set-up menu. All downstream units must be set up to **EXTERNAL ENABLED** in each set-up menu. See pages 9 and 10 for set up details, and wire as shown in **FIGURE 12**.

SEQUENCE OF OPERATION

Each unit in the daisy chain responds to the first unit being controlled by the A77. When the humidity level rises above the humidity setting, all units will dehumidify until the humidity measured by the A77 falls below the setting.

IMPORTANT: If the A77 or first dehumidifier experiences a fault or loses power, all downstream dehumidifiers will also stop function. If any dehumidifier in the daisy chain other than Unit #1 experiences a fault, that unit will stop operation as determined by the fault but all other units will continue operating. If any dehumidifier loses power, all downstream units will stop function.

FIGURE 12 – WIRING WITH A77 CONTROL

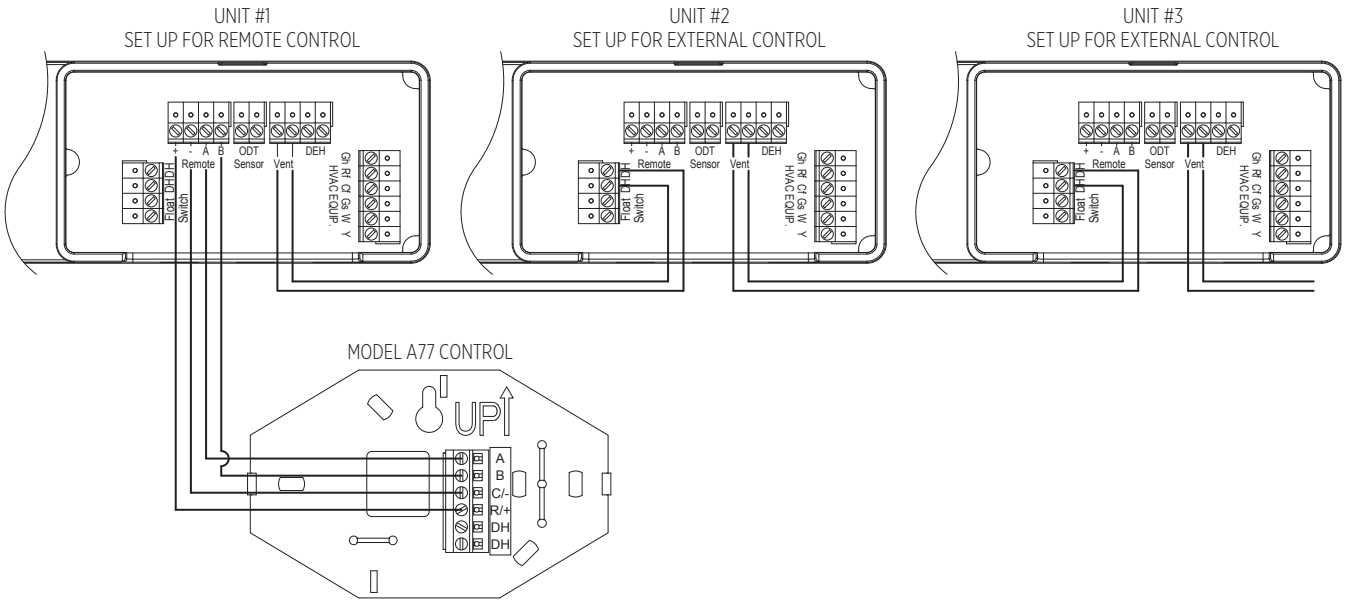

ALTERNATE EXTERNAL DRY CONTACT CONTROL AS DRIVING CONTROL

When a dry contact control is used to control the first dehumidifier, Unit #1 must be set to **EXTERNAL ENABLED** in the set-up menu. All downstream units must be set up to **EXTERNAL ENABLED** in each set-up menu. See page 10 for set up details and wire as shown in **FIGURE 13**.

SEQUENCE OF OPERATION

Each unit in the daisy chain responds to the first unit being controlled by the external control. When the humidity level rises above the humidity setting, all units will dehumidify until the humidity measured by the external control falls below the setting.

IMPORTANT: If the external control experiences a fault, all downstream dehumidifiers will also stop function. If any dehumidifier experiences a fault, that unit will stop operation as determined by the fault but all other units will continue operating. If any unit loses power, all downstream units will stop function.

FIGURE 13 – WIRING WITH ALTERNATE EXTERNAL CONTROL

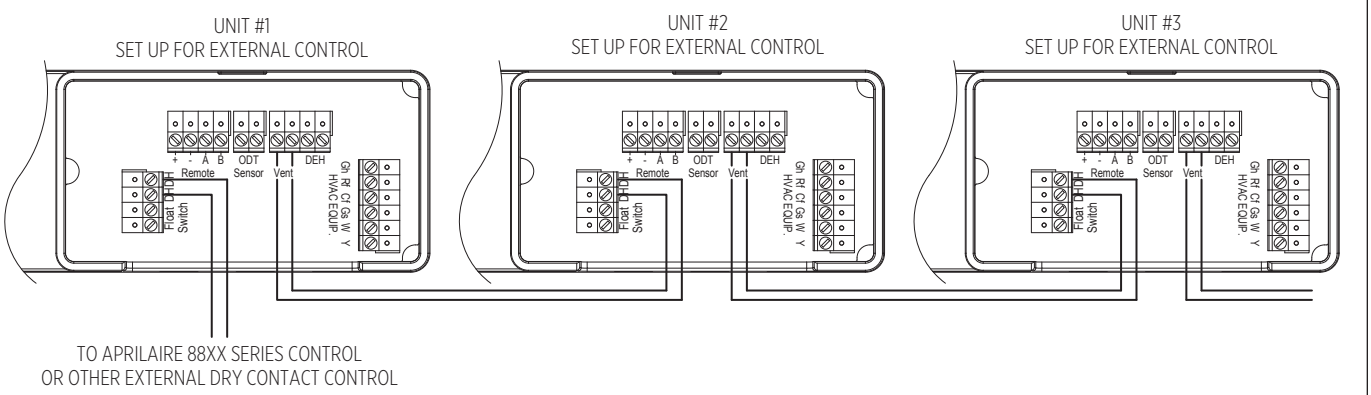

CODES (LOCATED ON BACK OF WIRE ACCESS COVER)

See the Installation Instructions for troubleshooting error codes. For additional assistance, Technical Support is available Monday through Friday, 8:00 a.m. to 5:00 p.m. CST, at (800) 972-3710.

Contact Technical Support before replacing the unit or components and for additional troubleshooting.

ERROR CODE	FAILURE MODE
E1	Internal %RH/Temperature Sensor Failure
E3	Model A77 Remote Control Communication Loss
E4	Insufficient Capacity
E5	High Temperature Thermistor Failure
E6	Low Temperature Thermistor Failure
E7	Float Switch Open
E8	Inlet Air Temperature Out of Range
E9	Fan or Compressor Fault

MAINTENANCE, SERVICE, AND TROUBLESHOOTING

NOTICE

- Troubleshooting and repairs shall be performed by a qualified HVAC service technician and only as recommended by the manufacturer. All safety procedures shall be followed.
- Lockout tagout procedures should be followed at all times during repairs.

TROUBLESHOOTING AND REPAIR

Safety checks shall be conducted prior to and after diagnosing or conducting repairs. If a fault exists that could compromise safety, then no electrical supply shall be connected to the unit until it is satisfactorily dealt with. If the fault cannot be corrected immediately but it is necessary to continue operation, an adequate temporary solution shall be used. This shall be reported to the owner of the equipment so all parties are advised.

SAFETY CHECKS

- Review all equipment markings and warnings.
- The refrigeration system is considered factory sealed and puncturing the refrigerant tubing in any way is prohibited.
- Repairing the refrigeration system shall not be performed in the field and must be done at the manufacturing facility by trained personnel.
- Disconnect electrical power before starting installation or servicing. Leave power disconnected until installation/service is completed.
- Ensure compressor capacitors are fully discharged; this shall be done in a safe manner to avoid the possibility of sparking.
- Ensure the system is grounded properly.
- Do not apply any permanent inductive or capacitance loads to the circuit without ensuring that this will not exceed the permissible voltage and current permitted for the equipment in use.
- Do not conduct any hot work on the system.
- Intrinsically safe components must be replaced; not repaired.
- Sealed electrical components must be replaced; not repaired.
- Replace components only with parts specified by the manufacturer. Other parts may result in the ignition of refrigerant in the atmosphere from a leak. Ensure that the apparatus is mounted securely.
- Ensure new and existing cable routing will not be subjected to wear, corrosion, excessive pressure, vibration, sharp edges, or any other adverse environmental effects as a result of maintenance or repair.
- Work shall be undertaken under a controlled procedure so as to minimize the risk of a flammable gas or vapor being present while the work is being performed.
- All maintenance staff and others working in the local area shall be instructed on the nature of work being carried out. Work in confined spaces shall be avoided.
- The area shall be checked with an appropriate refrigerant detector prior to and during work, to ensure the technician is aware of potentially toxic or flammable atmospheres (see **LEAK DETECTION** section for more details).
- All possible ignition sources, including cigarette smoking, should be kept sufficiently far away from the site of installation, repairing, removing and disposal, during which refrigerant can possibly be released to the surrounding space.
- Prior to work taking place, the area around the equipment is to be surveyed to make sure that there are no flammable hazards or ignition risks.
- “No Smoking” signs shall be displayed.
- When opening the enclosure for repair of electrical components, be sure to check for refrigerant leaks with a certified flammable refrigerant leak detector (see **LEAK DETECTION** section for more details).
- Ensure equipment markings continue to be visible and legible. Markings and signs that are illegible shall be corrected.

LEAK DETECTION

If a leak is suspected, all naked flames shall be removed/extinguished. The following leak detection methods are deemed acceptable for all refrigerant systems:

- An electronic leak detector appropriate for use with flammable refrigerants and does not act as a potential source of ignition.

  NOTE: leak detection equipment shall be set at a percentage of the LFL of the refrigerant and shall be calibrated to the refrigerant employed.
- Leak detection fluids are suitable for use with most refrigerants, but the use of detergents containing chlorine shall be avoided as the chlorine may react with the refrigerant and corrode the copper pipe-work.

  NOTE: Examples of leak detection fluids are:

  – bubble method

  – fluorescent method agents

DECOMMISSIONING

- Dispose of properly in accordance with federal or local regulations.
- All refrigeration circuit repair, recovery, or purging shall be done by the manufacturer.

DIAGNOSTIC CODES (LOCATED ON BACK OF WIRE ACCESS COVER)

See the Installation Instructions for troubleshooting error codes. For additional assistance, Technical Support is available Monday through Friday, 8:00 a.m. to 5:00 p.m. CST, at (800) 972-3710.

Contact Technical Support before replacing the unit or components and for additional troubleshooting.

When an error occurs, the Diagnostic Code along with **SERVICE REQUIRED** will be displayed on the control screen. If a 71000087 Alert Light is used, the light will turn on when an error occurs.

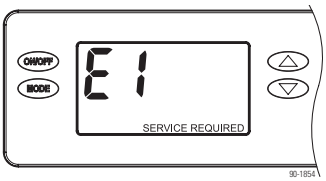

TABLE 1 – DIAGNOSTIC CODES

Diagnostic Code	Failure Mode	Action	Reset
E1	Internal Humidity or Temperature Sensor Open or Shorted	**1.** If connection okay, replace User Interface, Part #71000093.	Cycle Power
E3	Model A77 Remote Control Communication Loss	**1.** Check connections between Model A77 and dehumidifier control board. Terminals should be fully inserted and secured in the control board and Model A77 control terminals. **2.** If connections are correct and secure, turn off the dehumidifier and remove the Model A77. Use a short section of 4-wire cable to reconnect the Model A77 to the control board. Turn the dehumidifier back on and decrease the humidity setting below ambient conditions on the Model A77. If the dehumidifier turns on, the problem is with the wiring between the dehumidifier and control. **3.** If the dehumidifier does not turn on, call Technical Support.	Self-Correcting
E4	Insufficient Capacity	**1.** Check the frost sensor connection at the power board. Terminal should be fully seated on the power board pins. **2.** Remove the side access panel and verify that the sensor is secured to the suction line. **3.** If the sensor is connected and secured to the refrigeration line proceed to the next step. **4.** Reset the fault by cycling power to the dehumidifier. **5.** Turn the humidity setting down (below room/home humidity level) to make a dehumidification call. **6.** Allow the fan and compressor to run for approximately 10-15 minutes and then enter diagnostic test mode by simultaneously pressing the UP ARROW and MODE buttons for 3 seconds. The LCD will display the temperature measured by the internal sensor while also displaying AIR SAMPLING and ON, the humidity measured by the internal sensor while also displaying %RH and ON, and the frost sensor temperature while also displaying ON. Scroll through these values by using the UP/DOWN arrow buttons. **7.** Record values and call Technical Support.	Cycle Power
E5	High Temperature Thermistor Failure	**1.** Check the high temperature sensor connection at the power board. Terminal should be fully seated on the power board pins. **2.** Remove the side access panel and verify the sensor is not damaged and connected to the refrigeration line coming from the compressor. **3.** If the sensor is connected and secured to the refrigeration line, it may need to be replaced with Part #71000085 – contact Technical Support to confirm.	Cycle Power
E6	Low Temperature Thermistor Failure	**1.** Check the low temperature sensor connection at the power board. **2.** Remove the side access panel and verify the sensor is not damaged and connected to the suction line. **3.** If the sensor is connected and secured to the refrigeration line, it may need to be replaced with Part #71000084 – contact Technical Support to confirm.	Self-Correcting
E7	Float Switch Open	**1.** Empty the condensate pan. **2.** Check the float switch connection at the control board. **3.** If not using a float switch, verify jumper is between float switch terminals on dehumidifier control board. **4.** If the problem persists, replace the float switch.	Self-Correcting
E8	Inlet Air Temperature Out of 60°F – 100°F Range or Dew Point Below 36°F	**1.** Verify all ductwork is properly sealed. **2.** If no signs of leak points, contact Technical Support.	Self-Correcting
E9	Fan or Compressor Fault	**1.** Cycle power. If problem persists, contact Technical Support.	Cycle Power

TABLE 2 – TROUBLESHOOTING GUIDE		
Symptom	**Possible Reason**	**Troubleshooting Procedure**
Dehumidifier does not turn on/run.	No power to unit.	• Check that the dehumidifier is plugged in. • Check that the power switch is turned ON. • Check that the control is turned ON. • Check that the circuit breaker has not tripped.
Dehumidifier blower is running but with little or no airflow.	Pressure drop across dehumidifier is too high.	• Check dehumidifier air filter and replace if necessary. • Check for blocked duct work and clear.
Dehumidifier blower is running but compressor is not.	Float switch open.	• If float switch installed, check connections at control board and empty condensate pan. • If no float switch installed check that the jumper is installed at the float switch terminals on the control board.
	Coil frosting – defrost.	• Lack of or reduced airflow. Check dehumidifier air filter and replace if necessary. • Check for blocked duct work. • Inlet air conditions below 60°F. Increase the humidity setting.
	Inlet air temperature is outside of the 60°F to 100°F range or the dew point is below 36°F and there is a demand for dehumidification.	• Verify all ductwork is properly sealed.
Dehumidifier is not draining properly.	Drain line blocked or unit not level.	• Verify that the unit is level. • Check the drain line blockages and for a continuous downward slope.
Dehumidifier is producing hot air.	Normal function.	• Air is reheated across the condenser coil, resulting in a temperature rise between inlet and outlet, this is normal.

LIMITED WARRANTY

Your Research Products Corporation Anden™ Dehumidifier is expressly warranted for five (5) years from date of installation to be free from defects in materials or workmanship.

Research Products Corporation's exclusive obligation under this warranty shall be to supply, without charge, a replacement for any component which is found to be defective within such five (5) year period and which is returned not later than thirty (30) days after said five (5) year period by you to either your original supplier or to Research Products Corporation, Madison, Wisconsin 53701, together with the model number and installation date of the dehumidifier.

THIS WARRANTY SHALL NOT OBLIGATE RESEARCH PRODUCTS CORPORATION FOR ANY LABOR COSTS AND SHALL NOT APPLY TO DEFECTS IN WORKMANSHIP OR MATERIALS FURNISHED BY YOUR INSTALLER AS CONTRASTED TO DEFECTS IN THE DEHUMIDIFIER ITSELF.

IMPLIED WARRANTIES OF MERCHANTABILITY OR FITNESS FOR A PARTICULAR PURPOSE SHALL BE LIMITED IN DURATION TO THE AFORESAID FIVE YEAR PERIOD. RESEARCH PRODUCTS CORPORATION'S LIABILITY FOR INCIDENTAL OR CONSEQUENTIAL DAMAGES, OTHER THAN DAMAGES FOR PERSONAL INJURIES, RESULTING FROM ANY BREACH OF THE AFORESAID IMPLIED WARRANTIES OR THE ABOVE LIMITED WARRANTY IS EXPRESSLY EXCLUDED. THIS LIMITED WARRANTY IS VOID IF DEFECT(S) RESULT FROM FAILURE TO HAVE THIS UNIT INSTALLED BY A QUALIFIED HEATING AND AIR CONDITIONING CONTRACTOR. IF THE LIMITED WARRANTY IS VOID DUE TO FAILURE TO USE A QUALIFIED CONTRACTOR, ALL DISCLAIMERS OF IMPLIED WARRANTIES SHALL BE EFFECTIVE UPON INSTALLATION.

Some states do not allow limitations on how long an implied warranty lasts or the exclusion or limitation of incidental or consequential damages so the above exclusion or limitations may not apply to you.

This warranty gives you specific legal rights and you may also have other rights which vary from state to state.

WARRANTY REGISTRATION

Register your Anden product online at **anden.com** or mail in your registration by providing your name, address, phone number, email address, model number, serial number (located on the unit), date of purchase and dealer name and address to: Therma-stor LLC, 4201 Lien Rd, Madison, WI 53704.

SERVICE PARTS

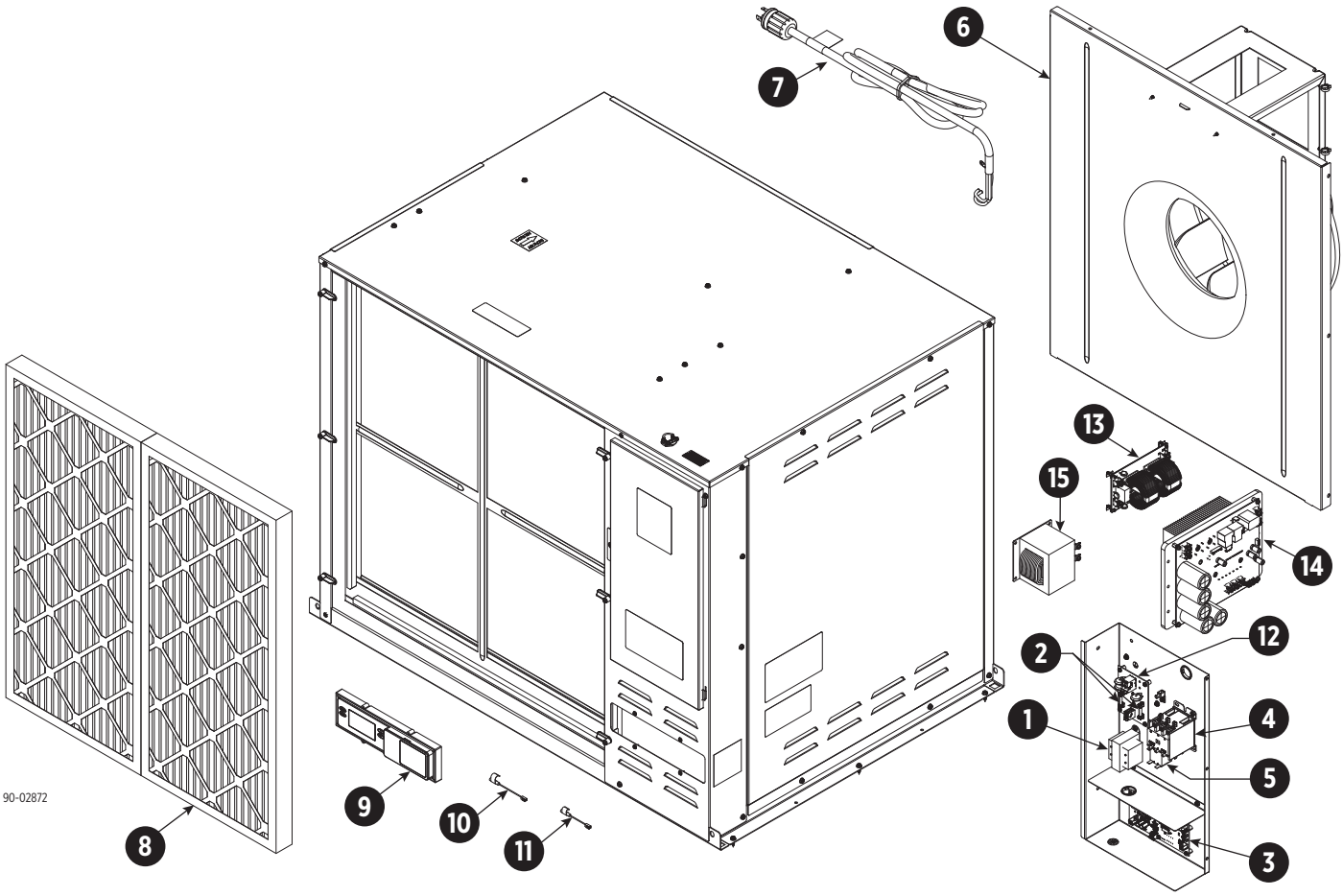

No.	Part Description	Part No.
1	Transformer, 40VA, 240V (V1)	71000069
	Transformer, 40VA, 277V (V3)	71000078
2	Fuse, Class 3AB, 0.4A, 70C, 440V, Slow-Blow	71000122
3	Internal Power PCB (replaces 71000089)	71000339
4	Compressor Contactor	71000061
5	Fan Relay	71000072
6	Fan Assembly for replacement of a Ziehl Fan (Blue Impeller)	71000337
	Fan Assembly for replacement of Fanstech Fan (Silver Al Impeller)	71000338
7	Cord, SJT 10/3, L6-30P (V1)	71000090
	Cord, SJT 10/3, L7-30P (V3)	71000091
8	Filter, MERV 11	5852
9	User Interface	71000093
10	Low Temperature Sensor	71000084
11	High Temperature Sensor	71000085

No.	Part Description	Part No.
12	MOV Board 240V	71000094
	MOV Board 277V	71000095
13	EMI Filter Board (V1)	71000107
	EMI Filter Board (V3)	71000096
14	Compressor Drive Board (V1)	71000108
	Compressor Drive Board (V3)	71000097
15	Choke-Compressor Drive	71000098
Not Shown		
Digital Dehumidifier Control		A77
P-Trap Kit		71000086
Fitting, 3/4" MNPT x 3/4" BARB, PVC		71000053
Drain Tubing, 3/4" ID x 10' L		71000063
Leveling Feet		5789
Alert Light		71000087
Duct Kit		5859

anden.com
P.O. Box 1467
Madison, WI 53701-1467
800.972.3710 F: 608.257.4357
Printed in USA. ©2025 Anden.
10023640A 12.25

anden