Model A210V1 & A320V1/V3 Dehumidifier

Quick Start Guide

THE QUICK START GUIDE IS TO BE USED AS REFERENCE ONLY.
INSTALLATION IS TO BE IN ACCORDANCE WITH INSTALLATION AND OPERATING INSTRUCTIONS PROVIDED WITH THE DEHUMIDIFIER.

1. PLACEMENT

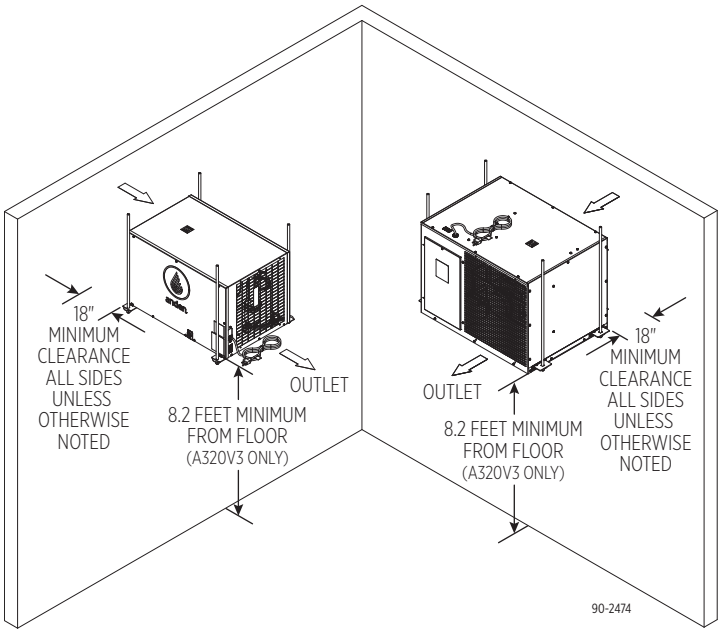

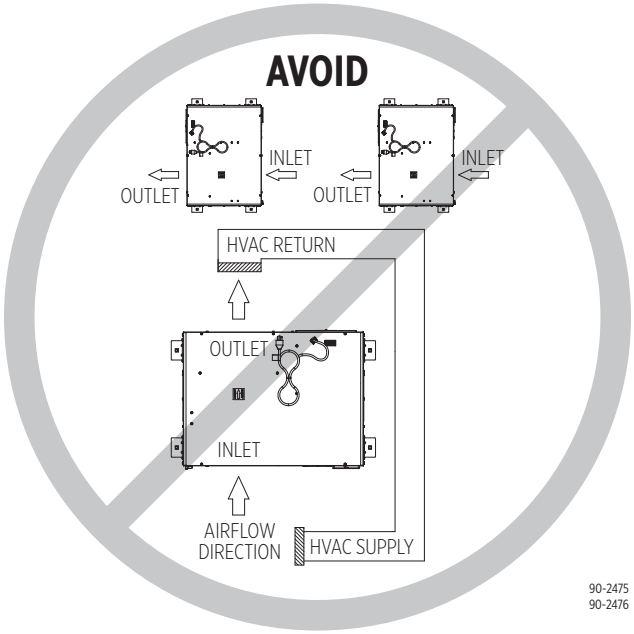

2. HANGING

MODEL A210V1

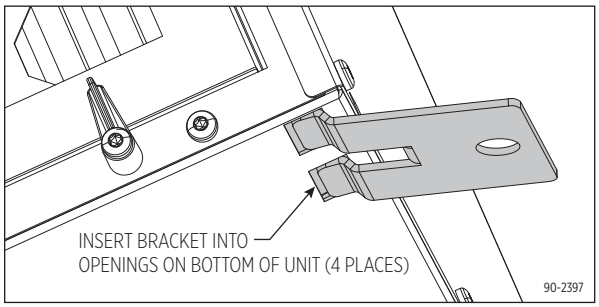

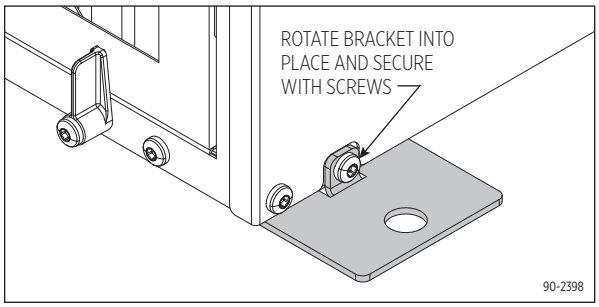

MODEL A320V1/V3

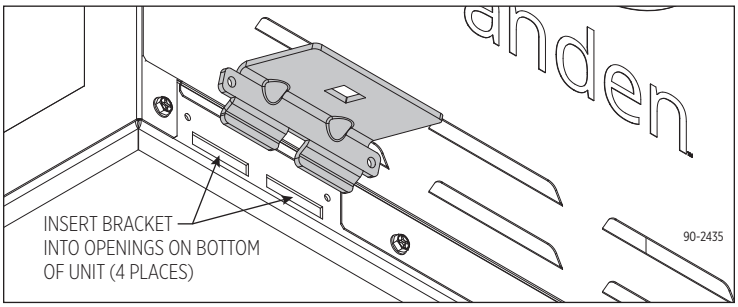

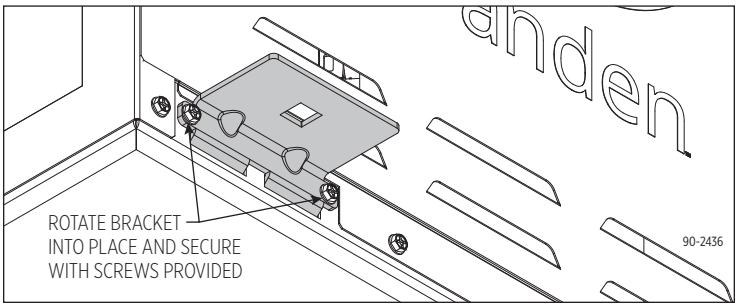

3. NUT & WASHER

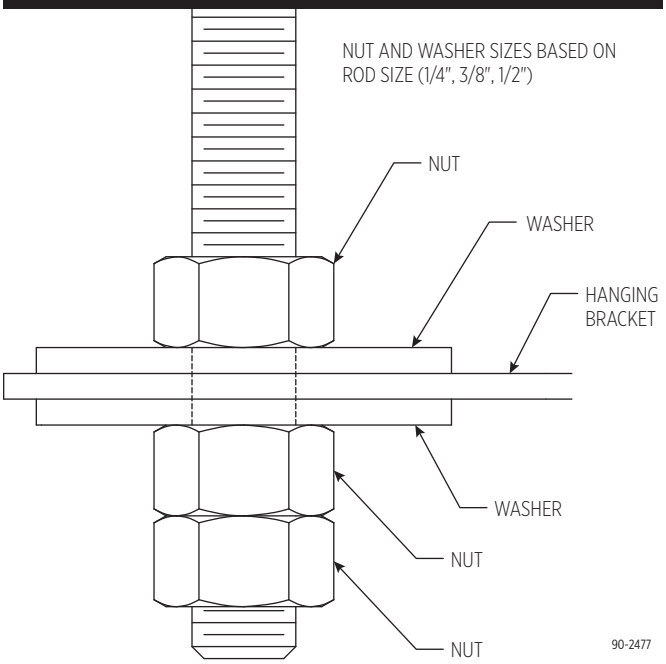

4. LEVEL

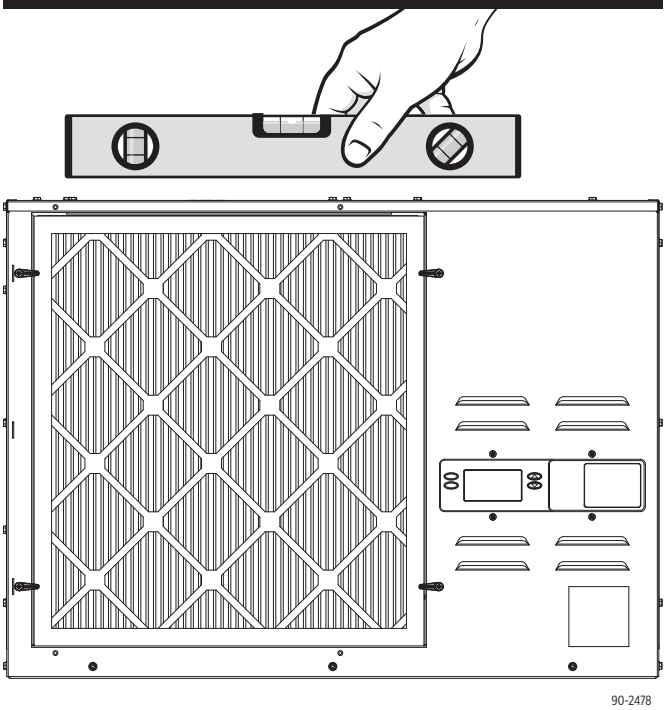

5. DRAIN CONNECTIONS

MODEL A210V1

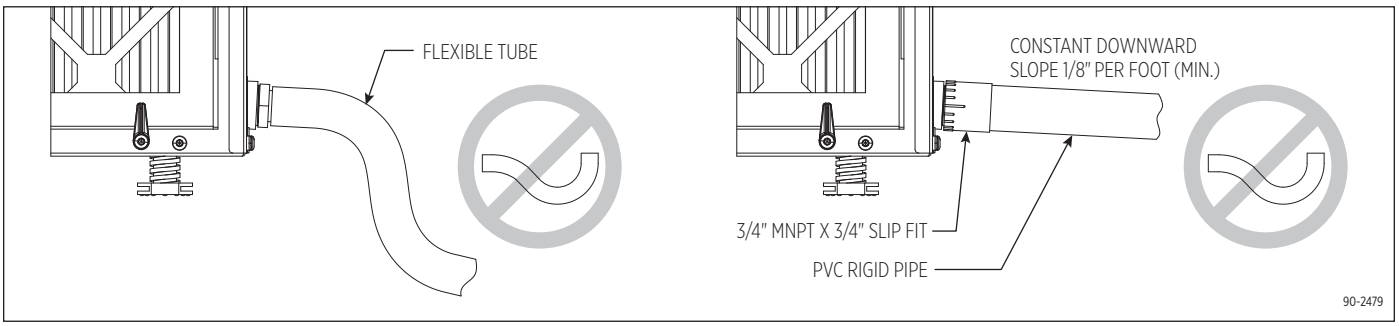

MODEL A320V1/V3 – DO NOT DOUBLE TRAP

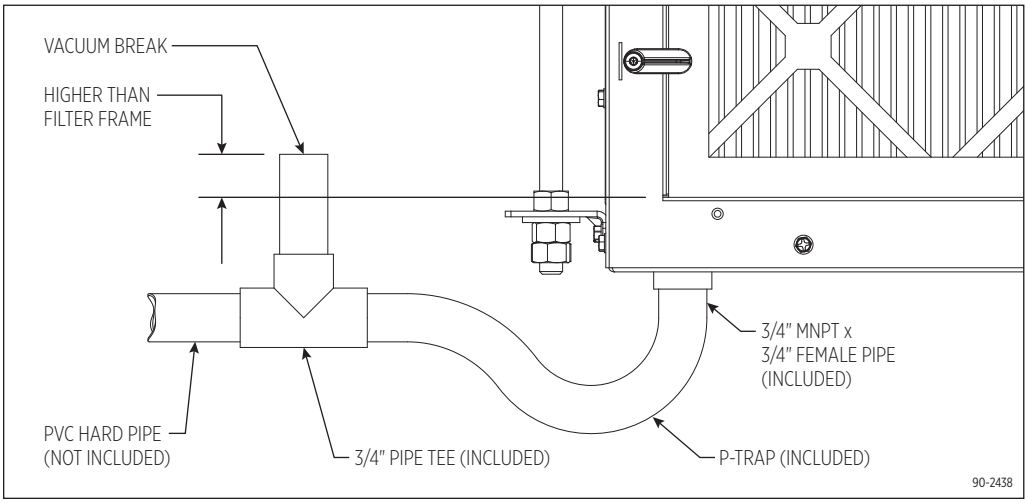

6A. WIRING AND SET-UP – MODEL A77 CONTROL

The Model A77 will measure the relative humidity and turn the dehumidifier on and off to control the humidity level to the desired setting. The humidity setting can be adjusted from the control, while the display allows easy access and monitoring of the humidity level in the space. It is recommended that the Model A77 be mounted at/near canopy height. Shield the Model A77 from direct exposure to HPS or LPS lighting.

NOTE: Use 18-22 AWG wire for control wiring.

Humidity can be controlled using the internal dehumidifier control, a Model A77 control, or a different external control like a thermostat.

Installing an external control eliminates the need to run the dehumidifier blower for sampling, as the control is constantly measuring the humidity close to the canopy. When the humidity level rises above the setting, the dehumidifier is turned on.

TO INSTALL AND USE THE MODEL A77 CONTROL, COMPLETE ALL STEPS:

1. Unplug the dehumidifier or turn off power to the circuit at the breaker or fuse.
2. Run thermostat cable (use 18-22 AWG wire) from the Model A77 to the control of the dehumidifier.
3. Trim about 1/4" of insulation from the end of the wires on each end. Insert the wire into the terminals as shown in the **MODEL A77 REMOTE CONTROL WIRING** diagram below.
4. Restore dehumidifier power.

MODEL A77 REMOTE CONTROL WIRING

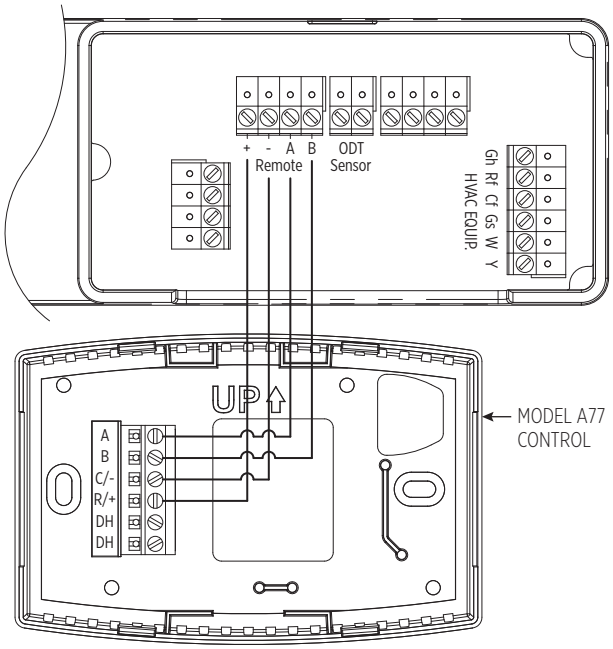

90-2490

TO SET THE DEHUMIDIFIER TO USE THE MODEL A77 CONTROL, COMPLETE ALL STEPS:

1. With power to the dehumidifier, use the ON/OFF button to set the dehumidifier to the OFF position.

   NOTE: If the display backlight is not on, the first button press (any button) will only turn the backlight on. Press the button a second time to achieve the desired function.
2. Hold the MODE button on the on-board control for 3 seconds to enter the **Installer Set-up Menu**.
3. The display should now read **REMOTE** on the left and **DISABLED** on the right. Use the UP or DOWN arrow buttons to set this to **ENABLED**.

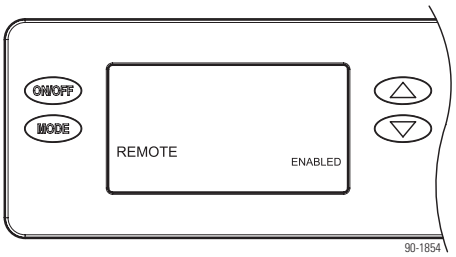

90-1854

4. Once the display reads **REMOTE ENABLED**, press the MODE button to cycle through the other settings until the display blinks **DONE** for 3 seconds.
5. Use the ON/OFF button to turn the dehumidifier ON. The display on your unit should read **REMOTE**.
6. Locate the Model A77 that you just set up. On the Model A77, press the ON button and use the arrow buttons to set your preferred %RH setpoint. When setting up in **REMOTE** mode for the first time, your dehumidifier will wait 3 minutes before starting to dehumidify, regardless of ambient conditions.

6B. WIRING AND SET-UP – ALTERNATIVE EXTERNAL CONTROL

Alternatively, use any other humidity control system as long as it has a dry contact, normally open output dedicated to controlling the dehumidifier. Reference the installation literature provided with the alternative control for wiring, set-up, and operating details.

TO INSTALL AND USE AN ALTERNATIVE EXTERNAL CONTROL, COMPLETE ALL STEPS:

1. Unplug the dehumidifier or turn off power to the circuit at the breaker or fuse.
2. Run thermostat cable (use 18-22 AWG wire) from the alternative external control to the control of the dehumidifier.
3. Trim about 1/4" of insulation from the end of the wires on each end. Insert the wire into the terminals as shown in the **ALTERNATIVE EXTERNAL CONTROL WIRING** diagram below.
4. Restore dehumidifier power.

ALTERNATIVE EXTERNAL CONTROL WIRING

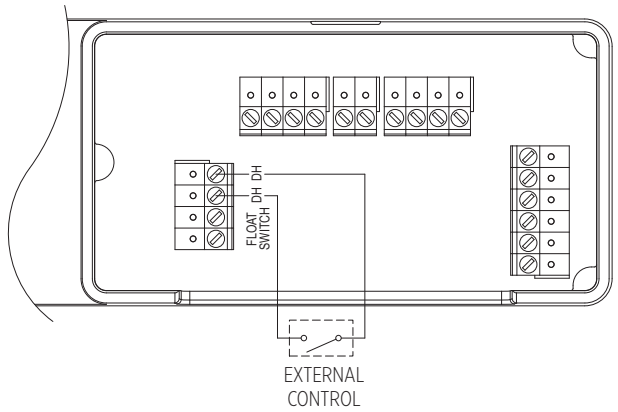

TO SET THE DEHUMIDIFIER TO USE THE ALTERNATIVE CONTROL, COMPLETE ALL STEPS:

1. With power to the dehumidifier, use the ON/OFF button to set the dehumidifier to the OFF position.

   NOTE: If the display backlight is not on, the first button press (any button) will only turn the backlight on. Press the button a second time to achieve the desired function.
2. Hold the MODE button on the on-board control for 3 seconds to enter the **Installer Set-up Menu**.
3. Press MODE again and the display should change to **EXTERNAL** in the center, and **DISABLED** on the right. Use the UP or DOWN arrow buttons to set this to **ENABLED**.

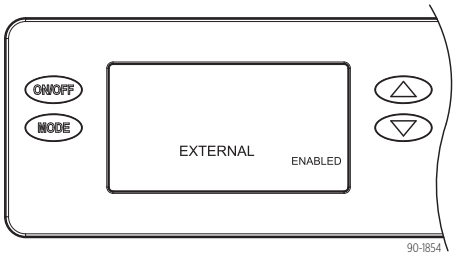

4. Once the display reads **EXTERNAL ENABLED**, press the MODE button to cycle through the other settings until the display blinks **DONE** for 3 seconds.
5. Use the ON/OFF button to turn the dehumidifier ON. The display on your unit should read **EXTERNAL**. Even if there is a demand for dehumidification according to your external control, the dehumidifier will wait 3 minutes before turning on for the **first time only**.

7. CODES (LOCATED ON BACK OF WIRE ACCESS COVER)

See the Installation Instructions for troubleshooting error codes. For additional assistance, Technical Support is available Monday through Friday, 8:00 a.m. to 5:00 p.m. CST, at (800) 972-3710.

Contact Technical Support before replacing the unit or components and for additional troubleshooting.

ERROR CODE	FAILURE MODE
E1	Internal %RH/Temperature Sensor Failure
E2	High Refrigeration Pressure
E3	Model A77 Remote Control Communication Loss
E4	Insufficient Capacity
E5	High Temperature Thermistor Failure
E6	Low Temperature Thermistor Failure
E7	Float Switch Open
E8	Inlet Air Temperature Out of Range

10022444B • 03.25
© 2025 Anden | anden.com | 800.972.3710
Anden reserves the right to change specifications without notice.